How to use 12V-40V 10A Pulse Width Modulation PWM DC Motor Speed Control Switch

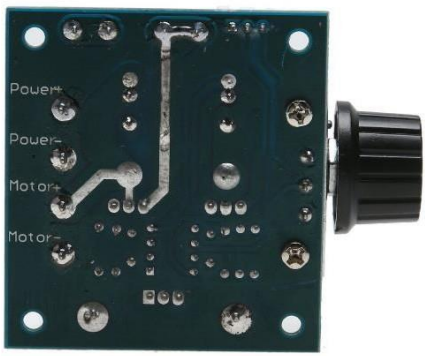

The DC Motor Speed Controller allows controlling direction of a DC motor using a Pulse-Width-Modulated (PWM) DC voltage with a Duty Cycle fully adjustable from 10%-100%. The motor speed controller can provide a continuous current of 8A to your DC motor or other DC load.

Specifications

- Motor Type: DC Motor
- Input supply voltage: DC 12V-36V
- The maximum output power: 400W
- The maximum continuous output current :8A
- The overload and short circuit protecting (Control)current is 10A
- Static Current:0.02 A (Standby)
- PWM frequency: 13kHz

- Duty Cycle adjustable: 10%-100%
- The operation environment temperature: -20℃-125℃
- Control Power: Voltage * Current
  12V*8A=96W ,24V*8A=192W,40V*8A=320W Power (12V when the power is 12 * 10 = 120W .....36V maximum power of 200W)
- Size: 60mm × 40mm
- Frequency:25KHZ

Connection

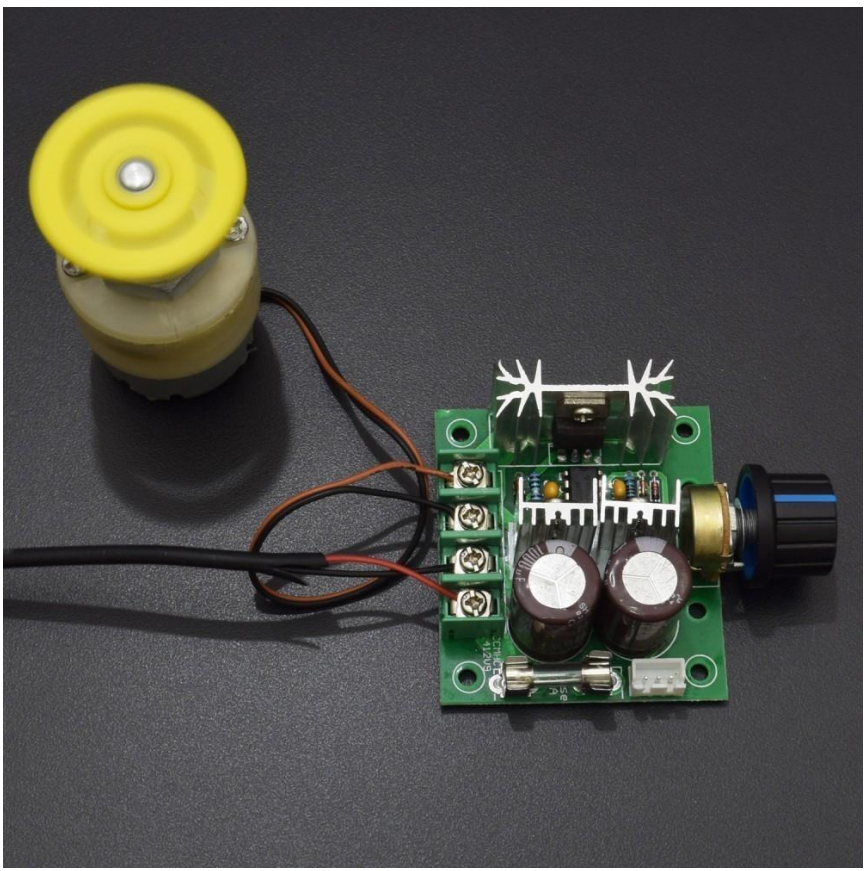

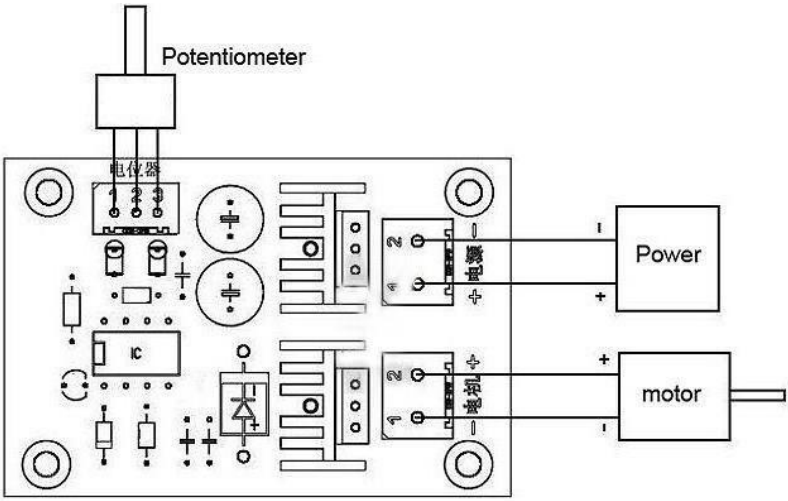

PWM DC motor speed controller

Note:

1. Please correct the picture of the wiring diagram by wiring
2. This can NOT be used to the BRUSHLESS motor. Double check all connections before applying power and always turn off the power supply before making any wiring changes.
3. DC motor speed control input is DC, cannot directly connect AC current (such as the 220V AC) otherwise it will burn. the governor small, Power greater, such as prolonged use of electrical motor load current should not exceed 5A, over the radiator temperature Will be high, should be compulsory for cooling, no forced cooling short running current
4. The positive and negative poles of the DC power supply cannot be reversed, Otherwise the governor will damage.
5. Motor can be divided into positive and negative, when the direction of operation and expectations are inconsistent, you can change the direction of the alignment.
6. The potentiometer knob can change the output duty cycle of the governor, thus changing the speed of the motor.